Product Information

Product Name: Classic Crossbody Shoulder Bag

SKU:340062

Product Size: 6.5"W x 8"H x 2.5"D

Imprint Area: Front: 4"Wx 4"H

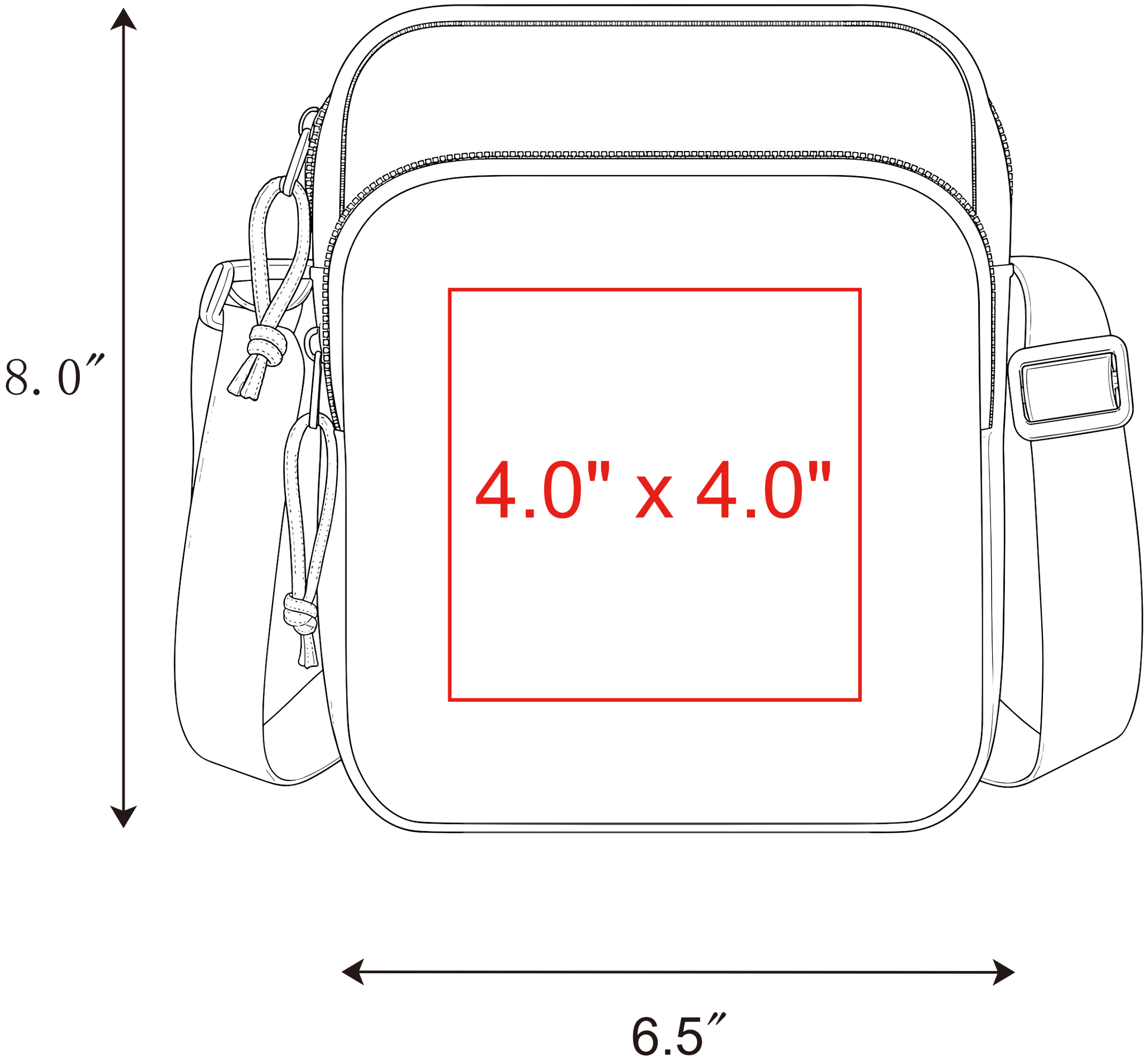

*Please note the size may have some difference due to manual measurement.